LOMAZOO

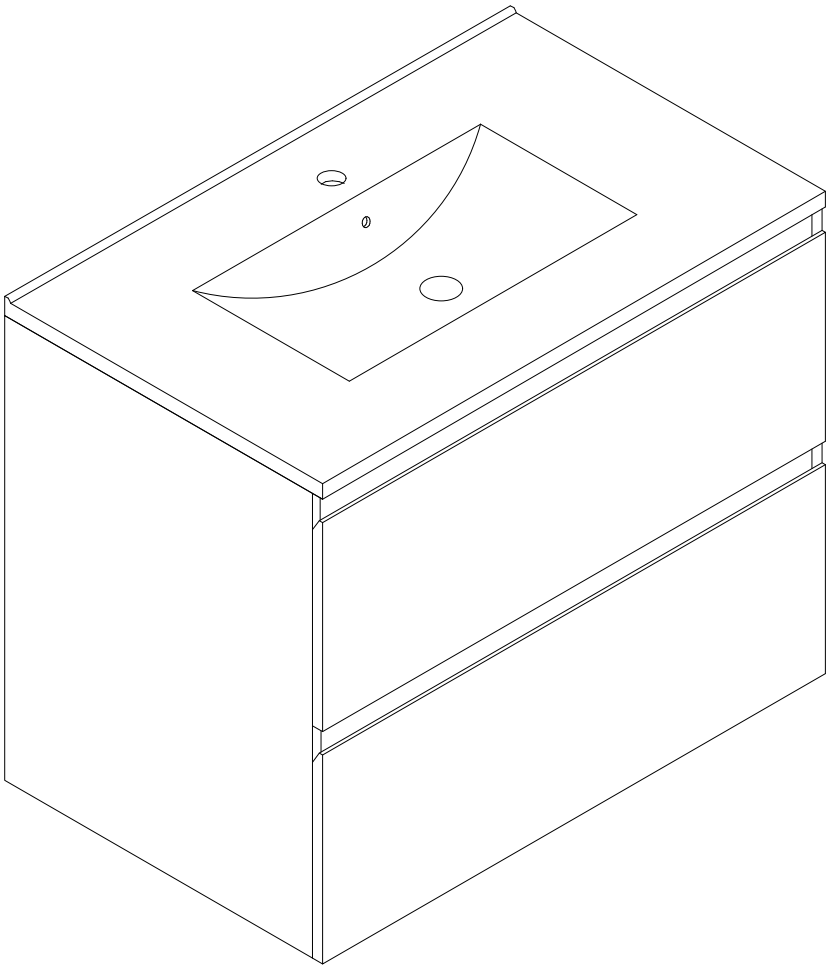

100cm

INSTRUCTION MANUAL

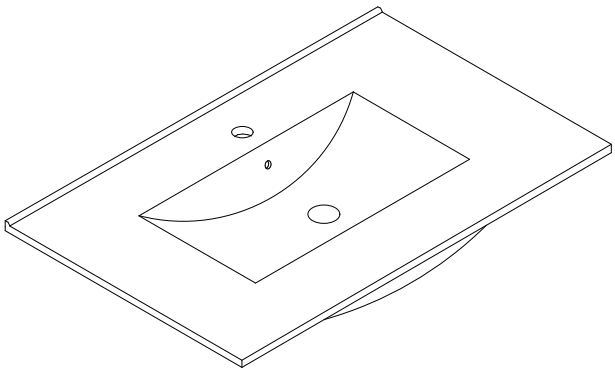

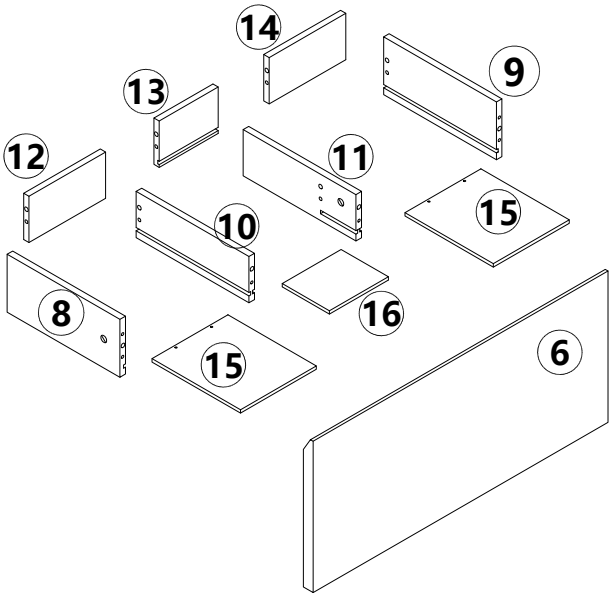

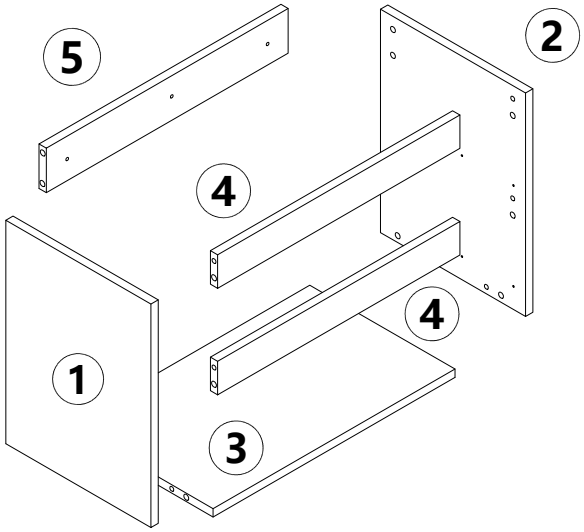

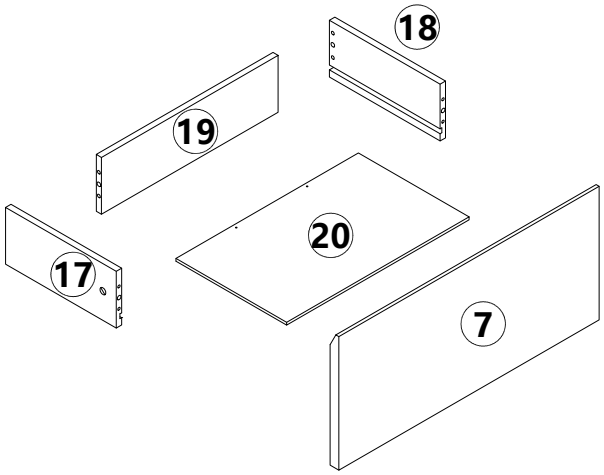

Ⓐ X26 	Ⓑ X26 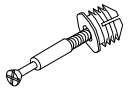	Ⓒ X28 	Ⓓ X2 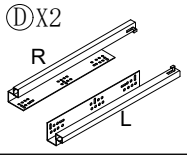	Ⓔ X46  M4x14mm	Ⓕ X26 	Ⓖ X2 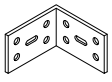	Ⓗ X3  Ø10x42mm
Ⓘ X3  M6x60mm							

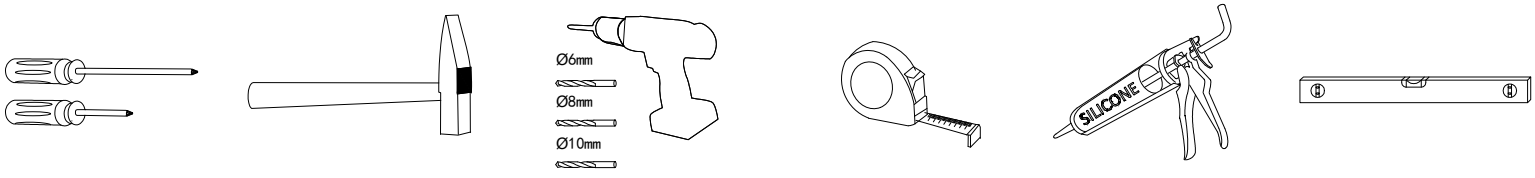

Step1	Ⓑ X12 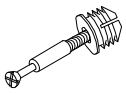	Ⓒ X8 		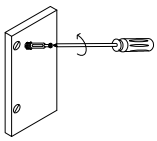			

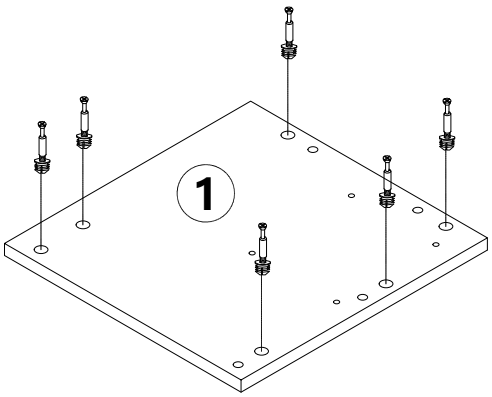

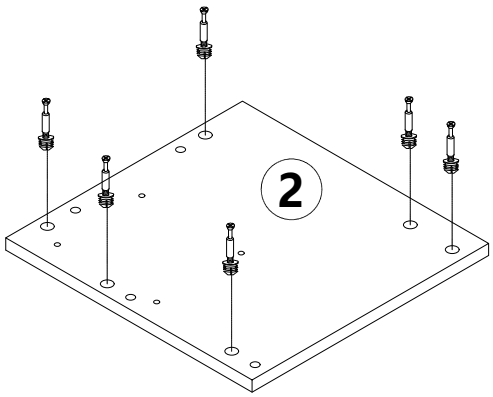

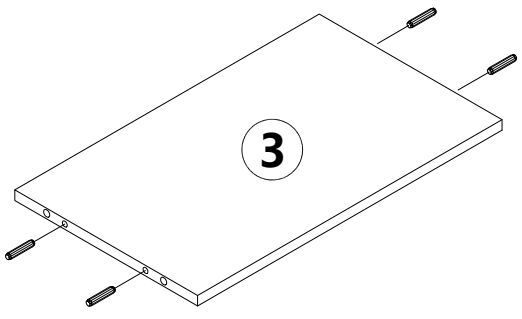

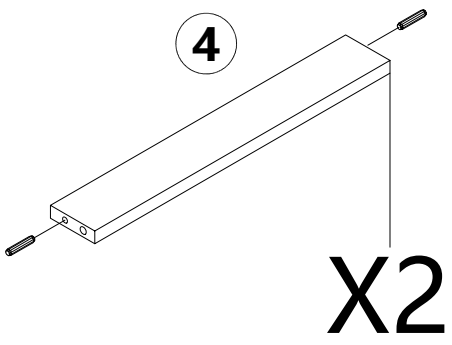

Step2

Ⓑ X10	Ⓒ X12					
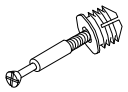			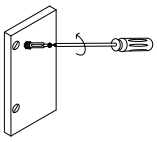			

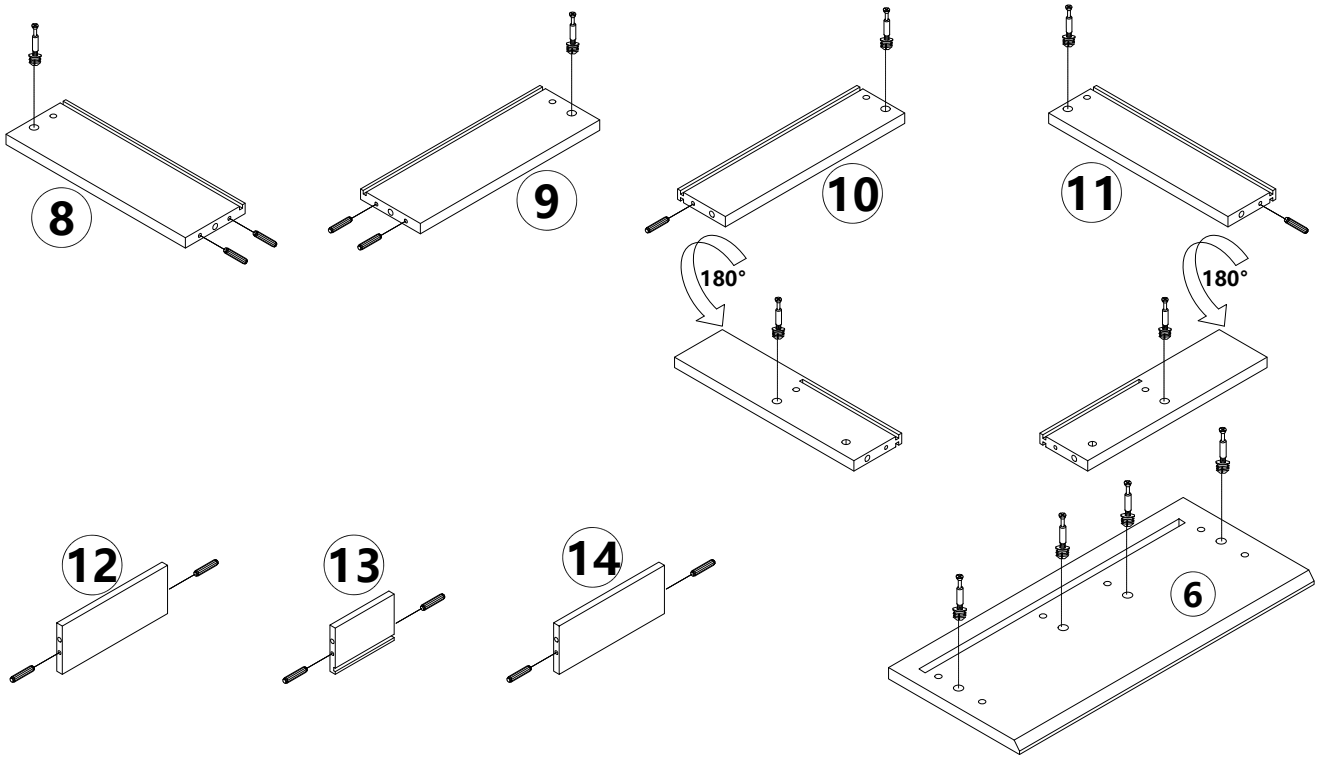

STEP3

Ⓑ X4	Ⓒ X8					
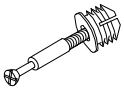						

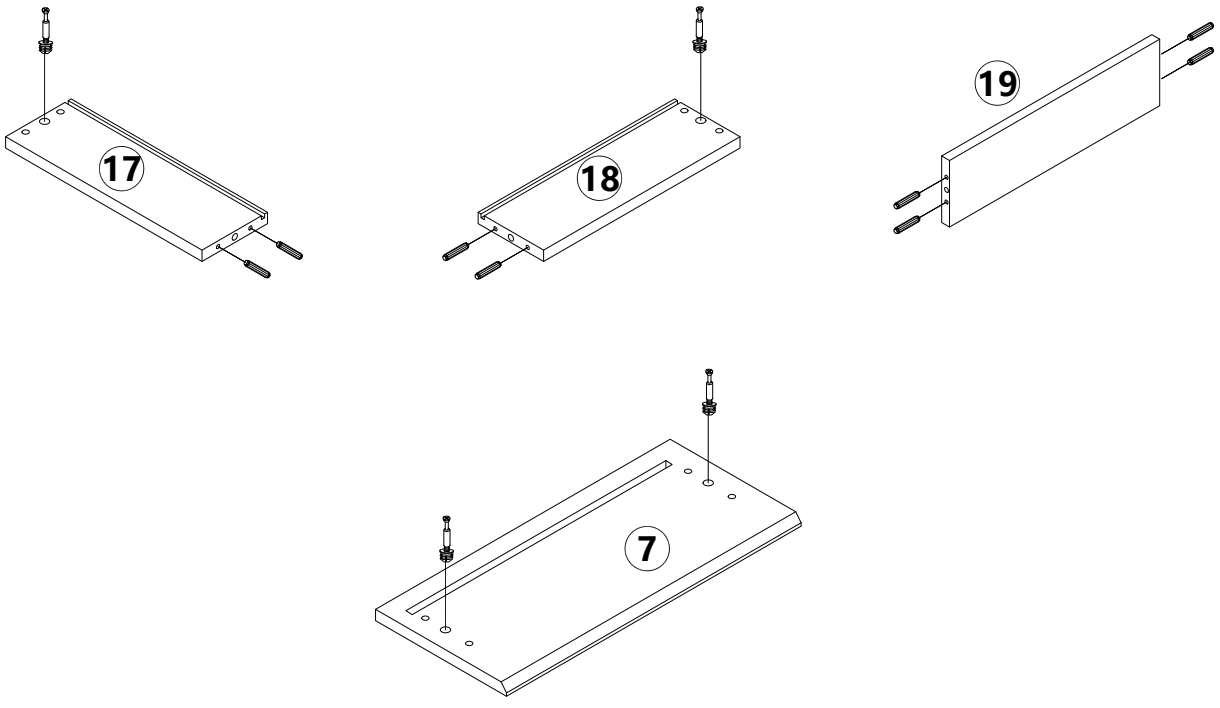

Step4

Ⓐ X12



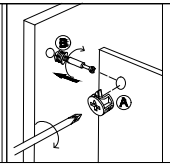

Ⓕ X12



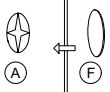

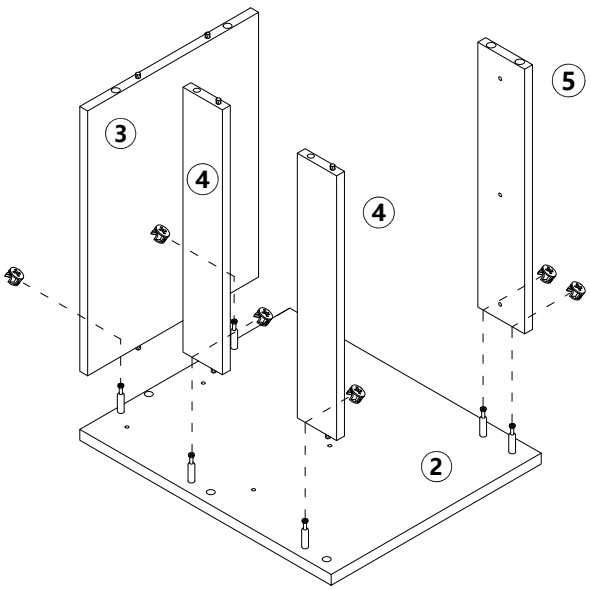

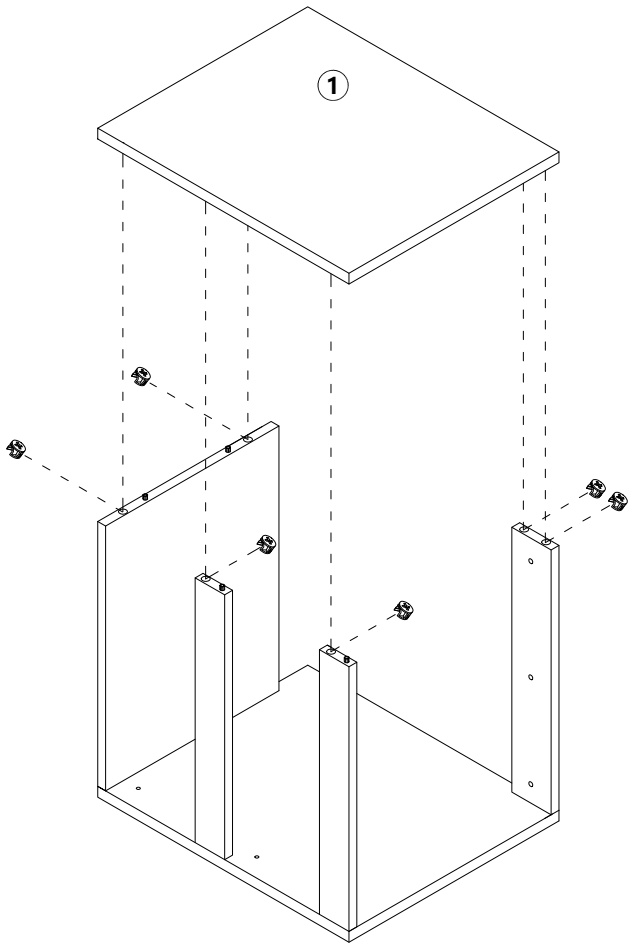

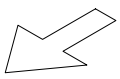

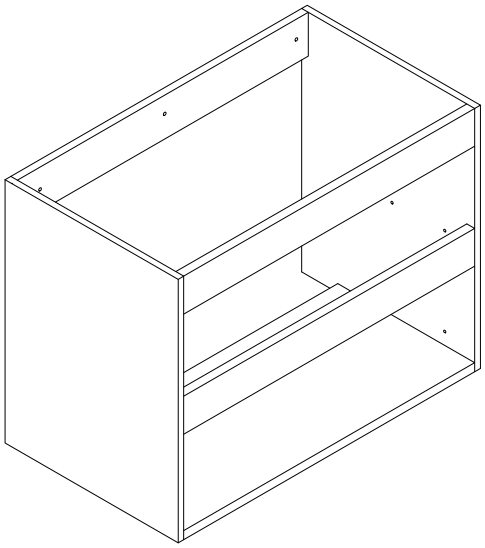

Step5

Ⓐ X10	Ⓕ X10	Ⓔ X4				
		 M4x14mm				

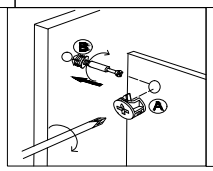

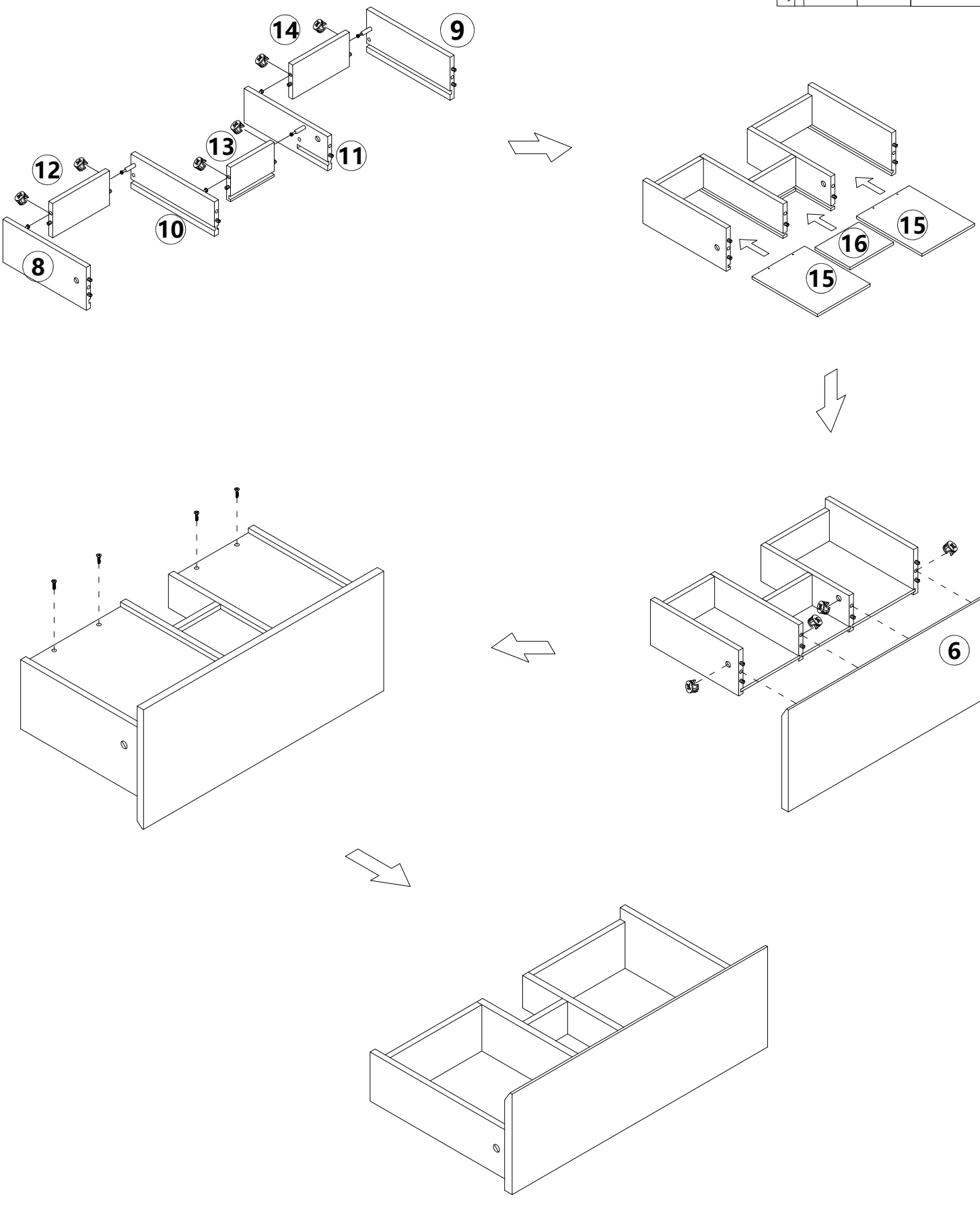

Step6

Ⓐ X4	Ⓕ X4	Ⓔ X2				
		 M4x14mm				

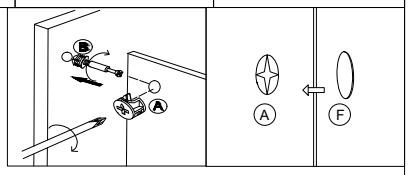

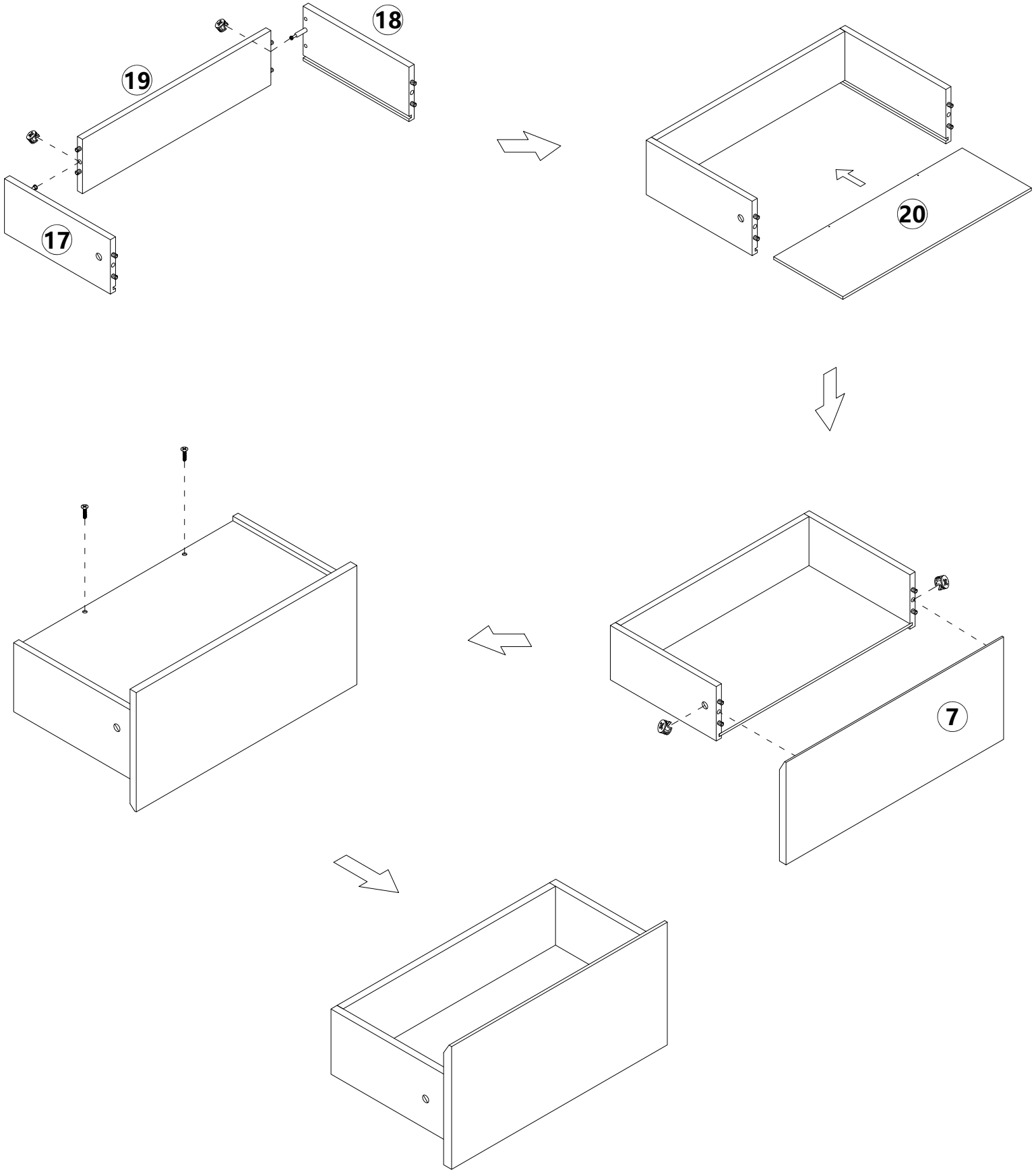

Step7

Ⓔ X24	Ⓓ X2
 M4x14mm	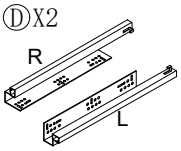

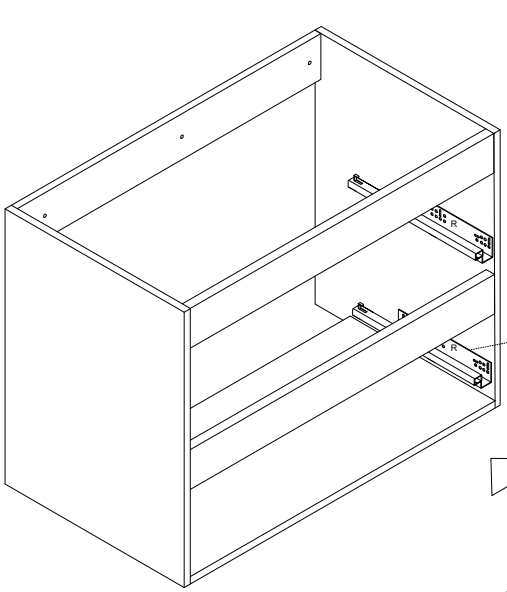

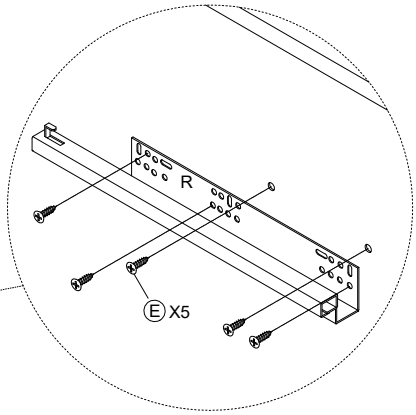

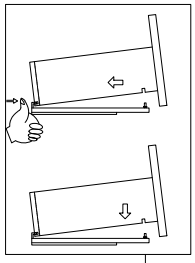

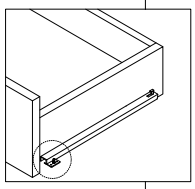

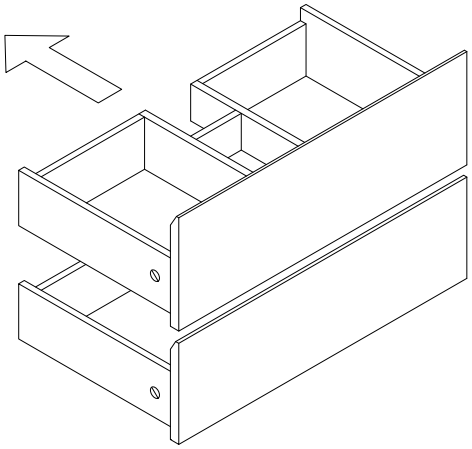

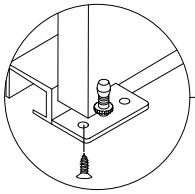

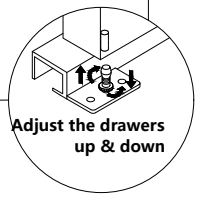

Step8

Ⓖ X2	Ⓔ X16
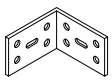	 M4x14mm

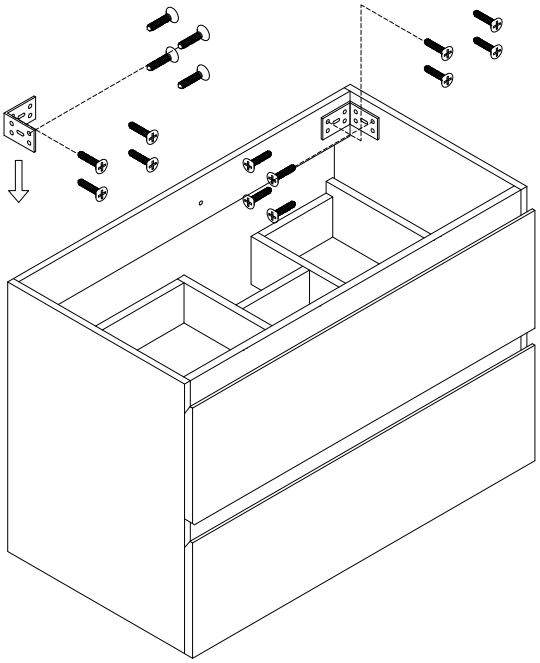

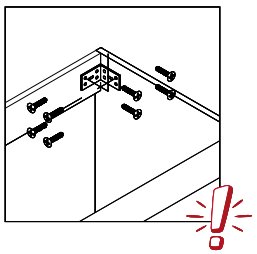

Step9

Ⓗ X3	Ⓘ X3
	
Ø10x42mm	M6x60mm

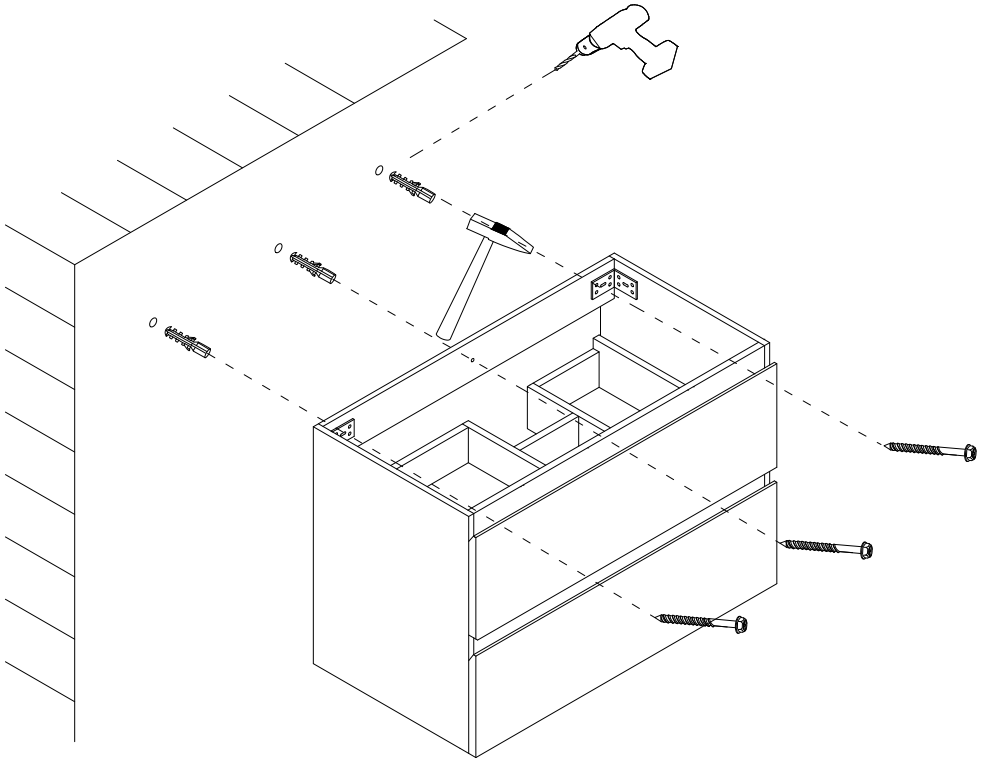

Step10

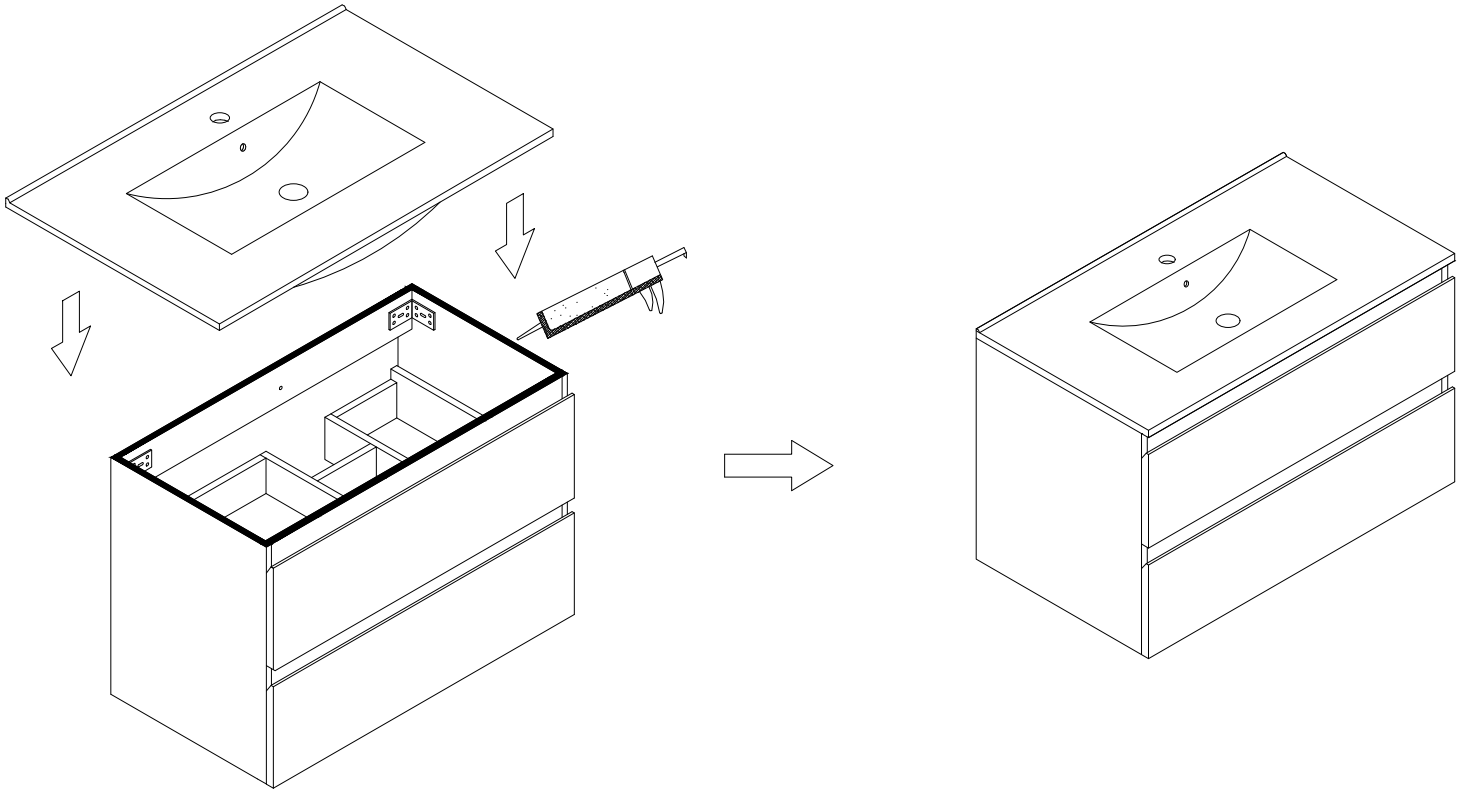

LOMAZOO

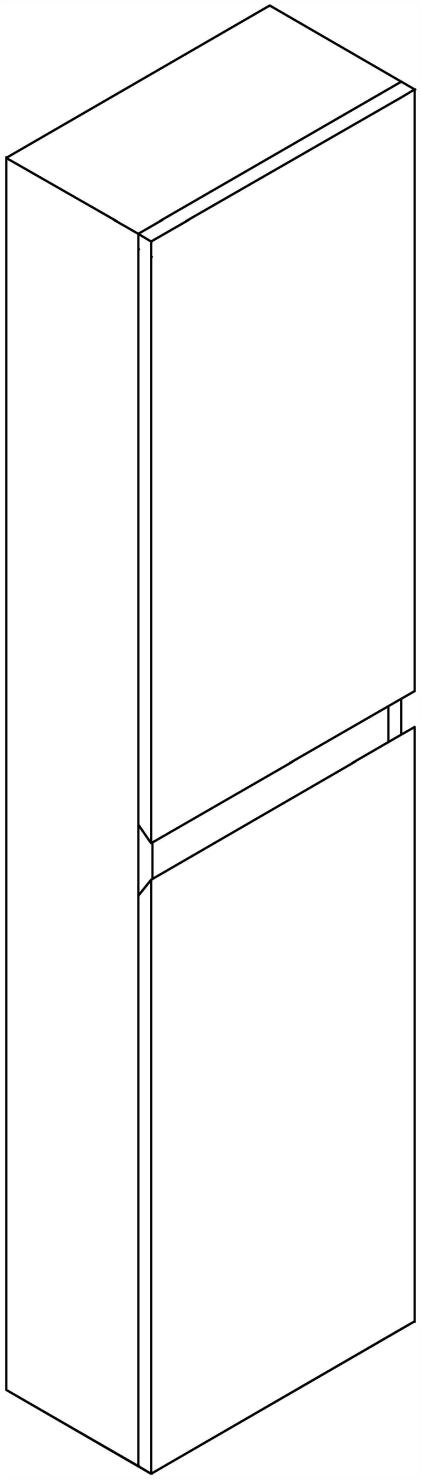

INSTRUCTION MANUAL

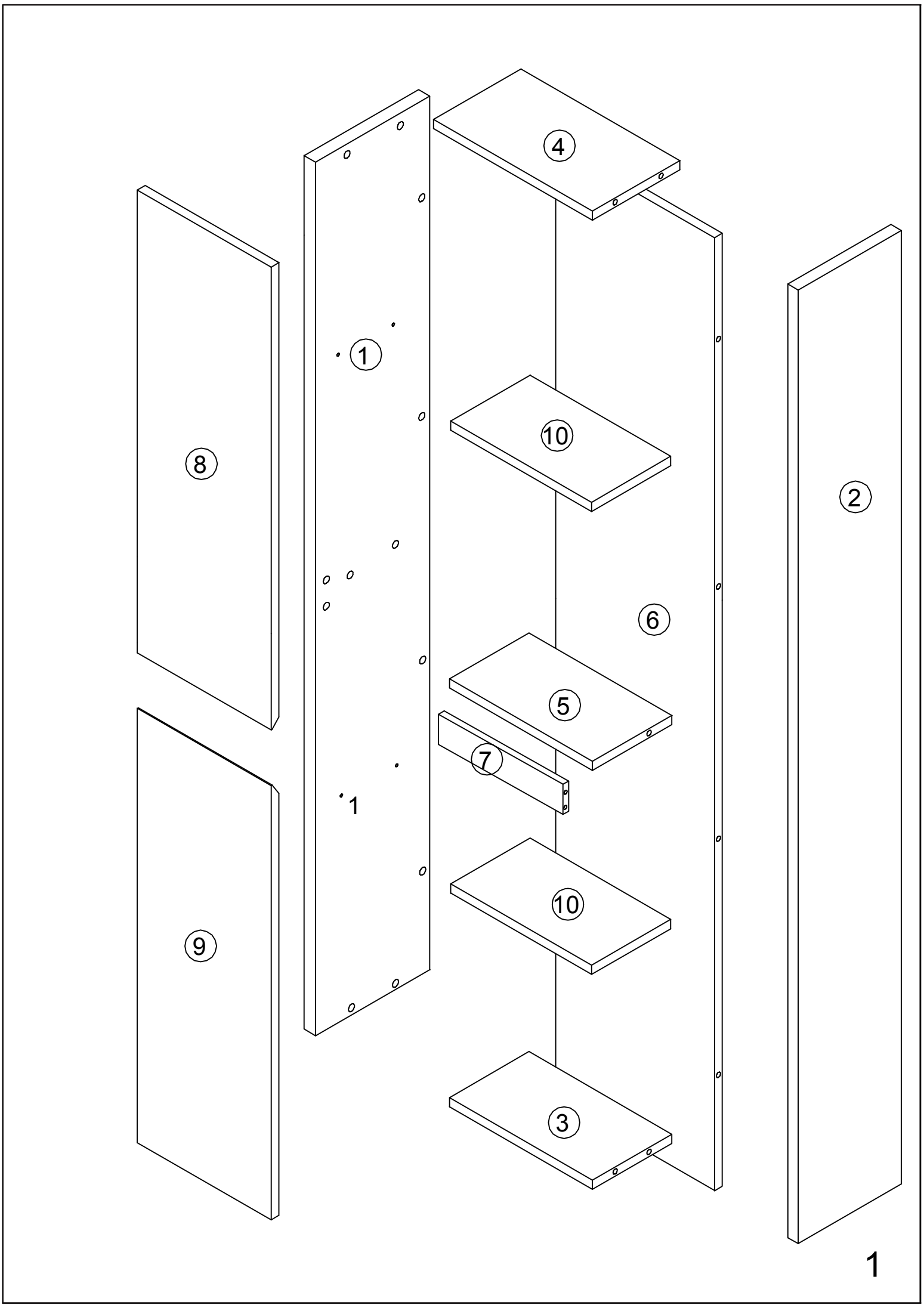
4
1
10
8
2
6
5
7
1
10
9
3

List of Hardware fittings

B x 24 	C x 24 	D x 8 	E x 2  50 mm	F x 2 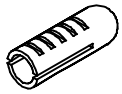 8 mm
G x 4 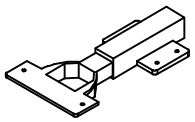	I x 24  14 mm	L x 2 	M x 2  Cap	

Step 1

B x 24 	D x 8 	

Step 2

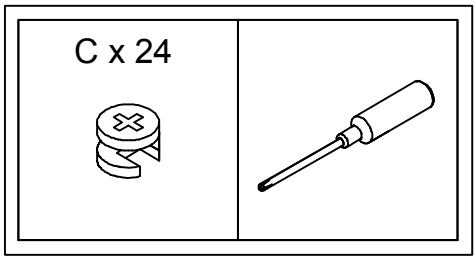

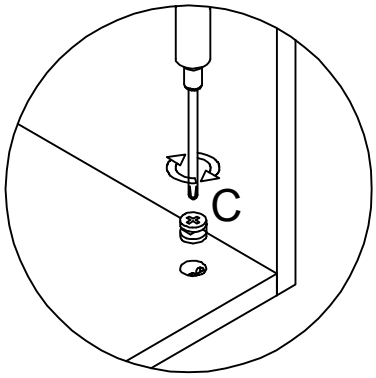

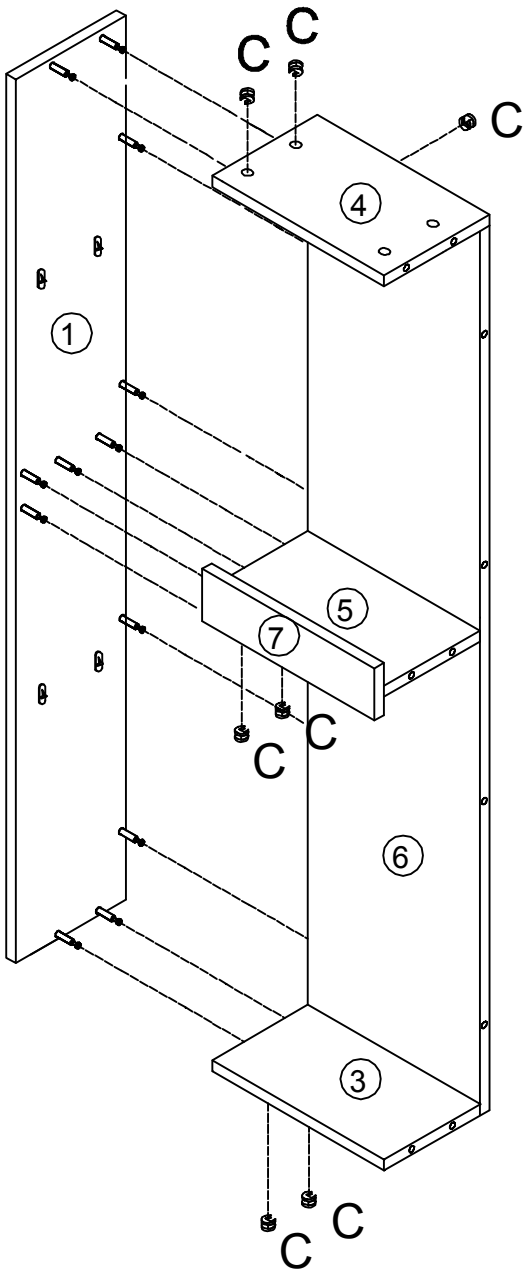

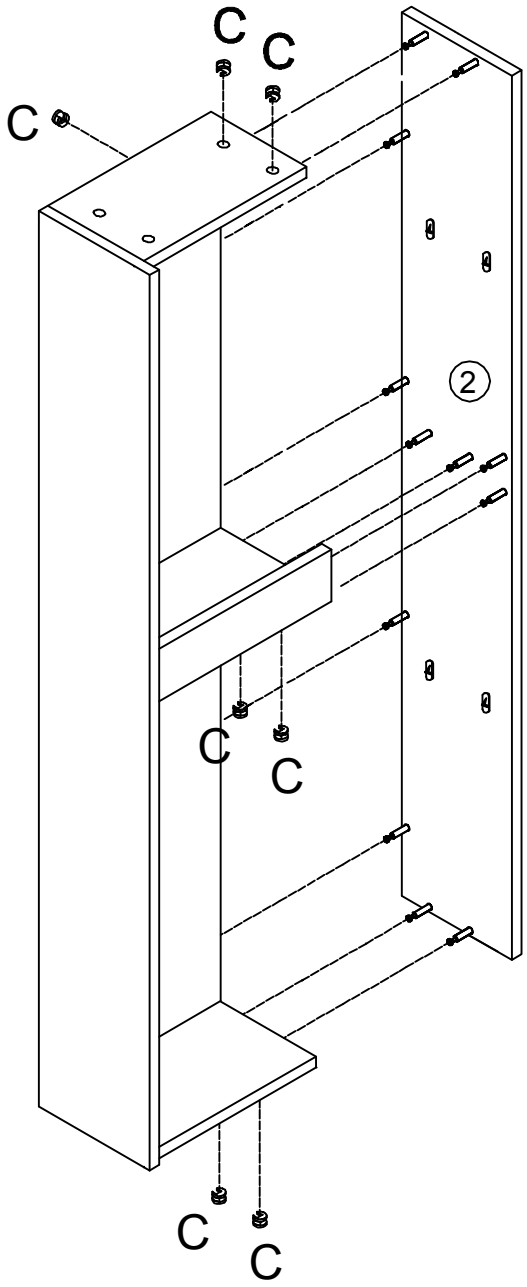

Step 3

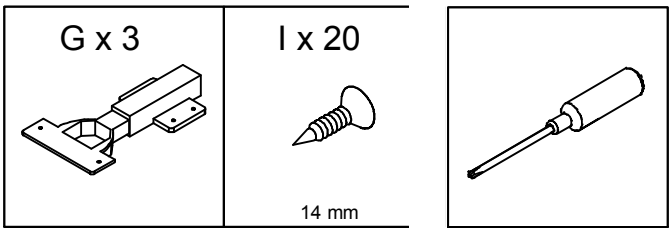

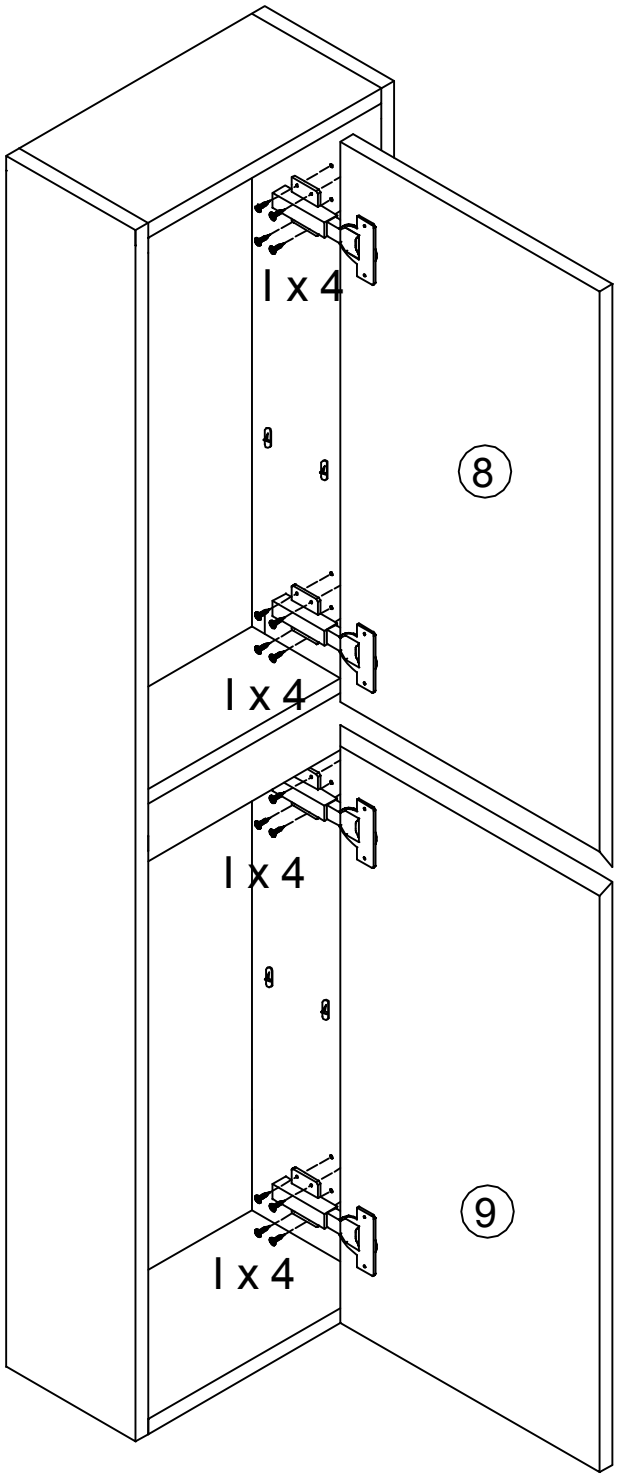

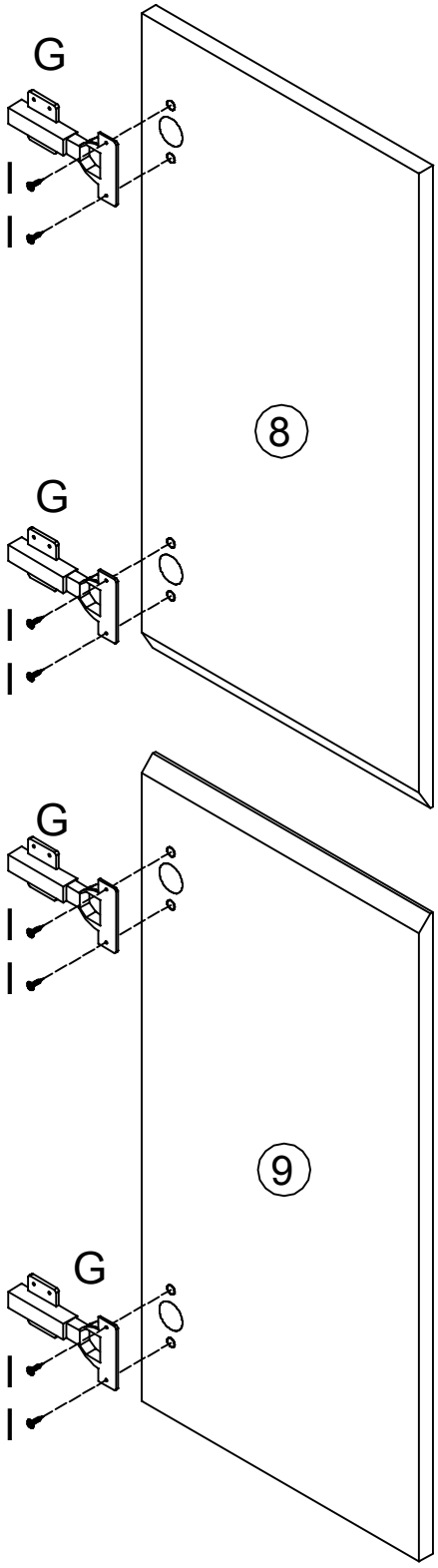

Step 4

L x 2	M x 2	E x 2	F x 2	
		 50 mm	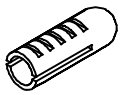 8 mm	